HEAT TREATMENT AND FINAL FINISH

PHYSICAL PROPERTIES	
Y. P.	
T. S.	
EL. 2	
RED	
BR.	
ROCK.	
SCL.	

MARCH 10, 1939

REVISIONS

7	5-10-45			
8	10-21-48			
9	11-15-49			

DRG. PERTAINS TO

51-83-1	.30 BMG M1944 (FXD)
51-84-1	.30 BMG M1944 (FLEX)
51-125-1	.30 BMG M1946

C5564906

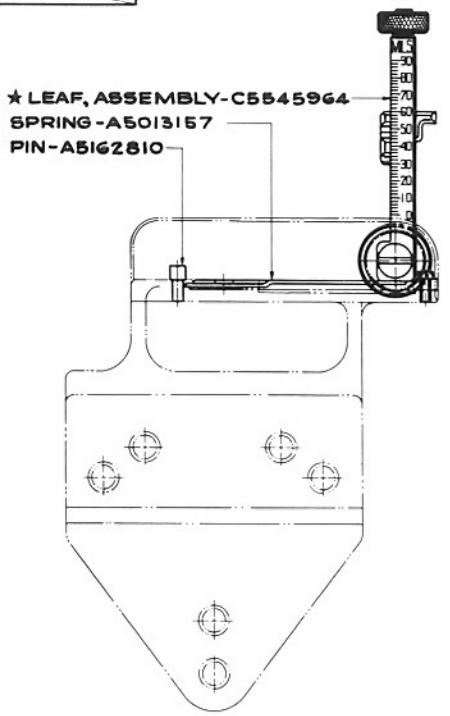

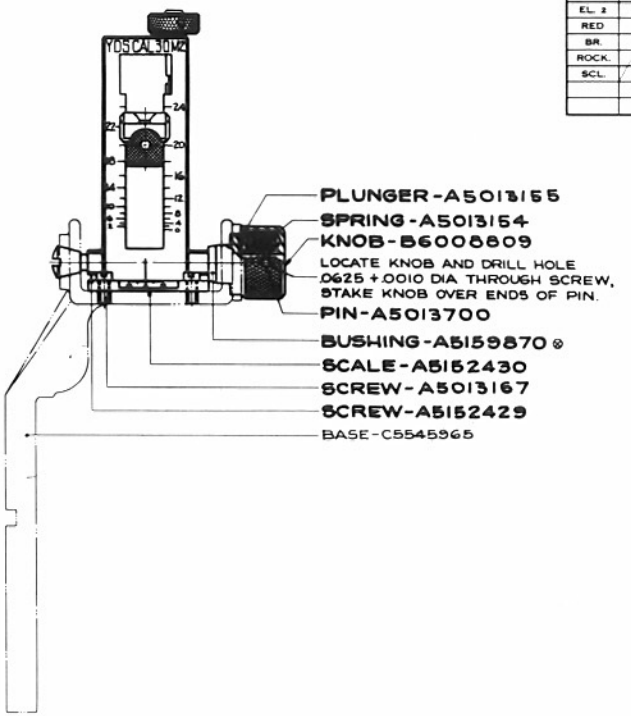

⊗ NOTE:
STAKE BUSHING A5159870 AT ASSEMBLY

SIGHT, REAR, GROUP, ASSEMBLY (5564906)

★ FINDING DIAGRAM

TOLERANCE ON DIMENSIONS NOT OTHERWISE SPECIFIED
DECIMAL ± ___
FRACTIONAL ± ___
ANGULAR ° ___

DRAFTSMAN	TRACED	L & S DRAFTSMAN
M.E.B.	Z.C.	
CHECKED		CHIEF DRAFTSMAN

SUBMITTED:
A.H.Roe

APPROVED BY ORDER OF THE CHIEF OF ORDNANCE
Walter Ackerman
ORD. DEPT. U. S. A.

ORDNANCE DEPT., U. S. A.
MADE AT ROCK ISLAND ARSENAL

WAS C64906

DO NOT INSCRIBE PART NO.

C 5564906

0 1 2 IN.

HEAT TREATMENT & FINAL FINISH	PHYSICAL PROPERTIES						MAY 1, 1929
DRAW AT 450°F	Y.P.		RED.		ROCK.		REVISIONS
	T.S.		BR.				
	EL.2						

16	12-18-41	22'	2-7-44
17	2-11-42	23'	CONVERSION 1-28-49
18	2-19-42	24'	3-24-49
19'	4-16-42	25'	5-24-49
20'	7-23-42		
21'	7-27-43		

DO NOT INSCRIBE PART NO.

~~51-13~~	~~.30BAR-M18~~
~~51-125~~	.30BMG-M19A6

Δ ☆ DIAMETER OF WIRE	.018
☆ TOTAL NUMBER OF COILS	10 1/2
MINIMUM INSIDE DIAMETER, FREE	
Δ ☆ OUTSIDE DIAMETER, FREE	.118 ± .002
☆ MAXIMUM OUTSIDE DIAMETER AT MINIMUM OPERATING HEIGHT	.123
☆ FREE LENGTH	.38 ± .030
Δ ☆ TYPE OF ENDS	PLAIN ENDS GROUND
☆ WOUND	R.H.
MEAN ASSEMBLED HEIGHT	.25
Δ ☆ LOAD AT MEAN ASSEMBLED HEIGHT	2 LBS. ± .56 LBS.
MINIMUM OPERATING HEIGHT	.206
Δ ☆ LOAD AT MINIMUM OPERATING HEIGHT	2.67 LBS. ± .75 LBS.
LBS. PER INCH OF SPRING DEFLECTION	15. APPROX.
SPRING FUNCTIONS IN HOLE	.125
SPRING FUNCTIONS OVER ROD	
☆ CALCULATED MAXIMUM SOLID HEIGHT	.190

Δ CAUTION: DO NOT COMPRESS SOLID.

NOTE: 0.5 % OF SPRINGS WILL BE FATIGUE TESTED BETWEEN ASSEMBLED HEIGHT AND MINIMUM OPERATING HEIGHT FOR 15,000 CYCLES. THE LOAD AT ASSEMBLED HEIGHT, AFTER TESTING, SHOULD NOT BE LESS THAN .52 LBS.

SPRING, REAR SIGHT WINDAGE CLICK PLUNGER
STEEL WD 1085 SPECIAL
USA SPEC 48-7-1 (CLASS A)

C5013154

☆ MANUFACTURING DATA
Δ MANDATORY REQUIREMENTS

SUPERSEDES OLD TRACING A13154
UNDER REVISION DATE OF DEC. 18, 1941.

A5013154 ~~A13154~~

DR'G. PERTAINS TO

~~51-70~~	.50BMG-M2 HB FLEX.
~~51-71~~	.50BMG-M2 HB FXD.
~~51-80~~	~~.50BMG-M2 HB FXD.N.~~
D6528337	~~SIGHT, REAR, GR. ASM.~~
~~51-83~~	.30BMG-M19A4 FXD.
~~51-84~~	.30BMG-M19A4 FLEX.
C5564906	~~SIGHT, REAR, ASM.~~
~~51-102~~	.30BAR-M18A2
D6535423	~~SIGHT, REAR, GR. ASM.~~
~~51-74~~	~~.30BMG-M2 HB FXD.~~
~~51-75~~	~~.30BMG-M2 HB FLEX.~~
~~51-77~~	.30BMG-M19A2

DIFTSMAN	TRACER	LDG DIVISION
RCB	R.S.	C.J.G.
CHECKER		CHIEF DIVISION
WSB		

SUBMITTED:
LT. COL., ORD. DEPT. U.S.A.

APPROVED BY ORDER OF THE CHIEF OF ORDNANCE:
CAPT. ORD. DEPT. U.S.A.

ORDNANCE DEPARTMENT, U.S.A.

SUPERSEDES A13154

~~13155~~

A5013155

HEAT TREATMENT & FINAL FINISH	PHYSICAL PROPERTIES					
HEAT TREAT.	Y.P.		RED.		SCL.	
	T.S.		BR.			
PROTECTIVE FINISH TYPE II CLASS A OR B.	EL. 2		ROCK	A73-77		
					19'	3-24-49

MAY 1, 1929

REVISIONS

11	2-7-40	15³	12-9-42
12²	5-1-41	16'	7-27-43
13"	4-16-42	17²	4-30-46
14²	7-23-42	18³	CONVERSION 1-28-49

DRG. PERTAINS TO

~~51-102~~	30 BAR - M1918 A2
~~51-70~~	50BMG-M2HB(FLEX)
~~51-71~~	50BMG-M2HB(FXD)
~~51-74~~	~~30BMG-M2HB(FXD)~~
~~51-75~~	~~30BMG-M2HB(FLEX)~~
~~51-77~~	30BMG-M19A2
~~51-83~~	30BMG-M19A4(FXD)(TANK)
~~51-84~~	30BMG-M19A4(FLEX)(TANK)
~~51-88~~	~~50BMG-M2HB(FXDN)~~
C5564906	~~SIGHT, REAR ASSEM.~~
D6528337	~~SIGHT, REAR GR. ASSEM.~~
~~D35377~~	~~SIGHT, REAR GR. ASSEM.~~
D6535423	~~SIGHT, REAR GR. ASSEM.~~
~~51-73~~	~~30 BAR - M18~~
~~51-125~~	30BMG-M19A6

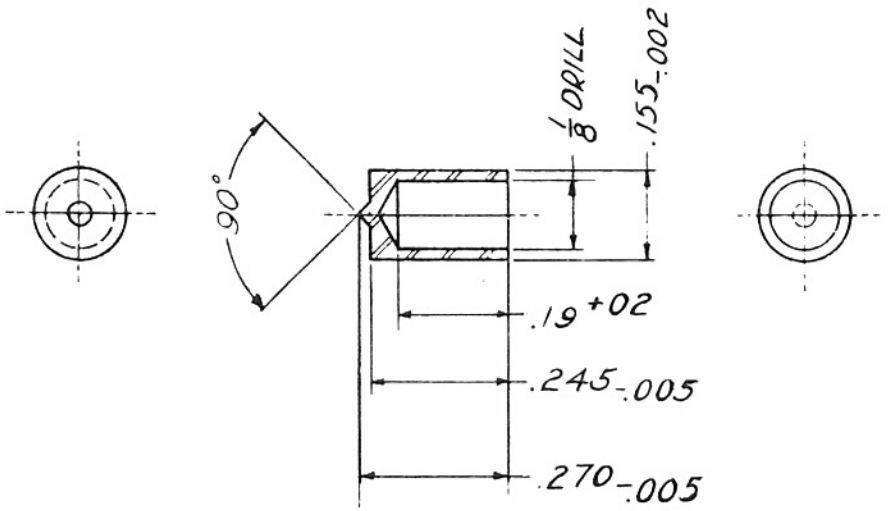

5013155

PLUNGER, REAR SIGHT WINDAGE CLICK ~~A13155-17~~

STEEL WD1085 COLD DRAWN

BREAK CORNERS

FINISH f

TOLERANCE .01 ALLOWED ON ALL DIMENSIONS UNLESS OTHERWISE SPECIFIED.

SUPERSEDES OLD TRACING A13155 UNDER REVISION DATE OF FEB. 7, 1940.

SCALE 4/1

DO NOT INSCRIBE PART NO.

A5013155

~~A13155~~

M.O.L.	[illegible]	[illegible]
E.C.P.	[illegible]	[illegible]

SUBMITTED: [illegible] Walter Sutton

MAJ. ORD. DEPT. U.S.A.

APPROVED BY ORDER OF THE CHIEF OF ORDNANCE

[illegible]

LT. COL. ORD. DEPT. U.S.A.

ORDNANCE DEPT. U.S.A.

15-15 SUPERSEDES A13155

~~A13157~~

A5013157

HEAT TREATMENT & FINAL FINISH	PHYSICAL PROPERTIES						MAY 1, 1929
HEAT TREAT	Y.P.		RED.		ROCK	A73-76	REVISIONS
	T.S.		BR.				19 2-9-44
TYPE II CLASS B	FL.2						20' 3-20-44
							21² 4-30-46
							22³ CONVERSION 1-28-49

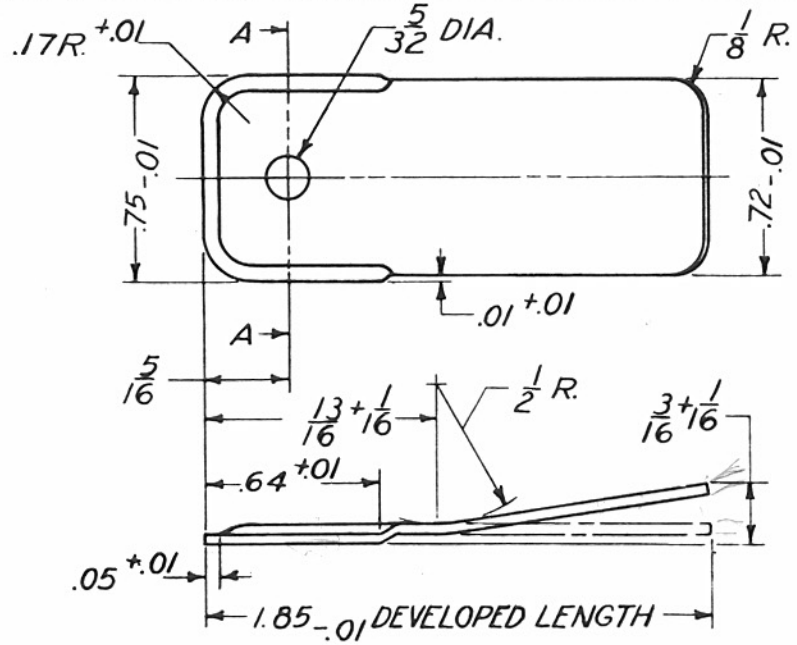

XO 3200-8000
3440-2000
10,000 SPRINGS WERE MADE TO REV. 9-25-40, AND THEN MODIFIED TO REV. 11-1-40

DO NOT INSCRIBE PART NO.

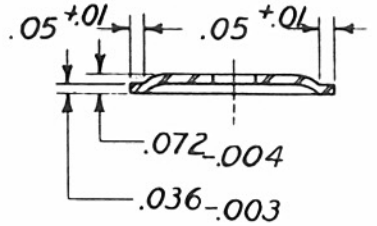

SECTION A-A

5013157

SPRING, REAR SIGHT BASE ~~A13157-21~~

SPRING STEEL WD1095

NOTE:-FOR ALTERNATIVE METHOD OF MANUFACTURE SEE DRG. A13157A

SCALE 2/1

TOLERANCE ±.01 ALLOWED ON ALL DIMENSIONS UNLESS OTHERWISE SPECIFIED.
SUPERSEDES OLD TRACING A13157
UNDER REVISION DATE OF FEBRUARY 9, 1944

SPRINGFIELD ARMORY
A5013157

~~A13157~~

DRG. PERTAINS TO	
~~51-13~~	~~.30BAR-M18~~
51-74	.30BMG-M2HB(FXD)
51-75	.30BMG-M2HB(FLEX)
51-77	.30BMG-M19A2
51-83	.30BMG-M19A4(FXD)
51-84	.30BMG-M19A4(FLEX)
~~51-102~~	.30BAR-M1918A2
51-125	.30BMG-M19A6
C7416	SIGHT, REAR W/LATCH
	FIND. DIAG.
C64906	SIGHT, REAR, ASM.
D6535423	~~SIGHT, REAR, GR. ASM.~~

DCP	DCP	L.D.O. D'FTSMAN L S C
MEB		CHIEF D'FTSMAN

SUBMITTED:-
E. W. Hopkins
HD ORD ENG ORD. DEPT.

APPROVED BY ORDER OF THE CHIEF OF ORDNANCE:-
B. W. Littaker
LT COL ORD. DEPT.

ORDNANCE DEPT., U. S. A.

SUPERSEDES A13157

~~A 13167~~

HEAT TREATMENT & FINAL FINISH	PHYSICAL PROPERTIES						MAY 1, 1929
	Y.P.		RED.		ROCK		REVISIONS
PROTECTIVE FINISH TYPE CLASS A OR B.	T.S. EL.2		BR.				15 8-5-42
							16 11 7 42
							17 12 [illegible] 42
							18 7-27-43
							19 4 30 46
							20 CONVERSION 3-30-49

~~828337~~	~~SIGHT, REAR, GR ASM.~~
~~51-125~~	.30 BMG-M19A6
C6528327	

DRG. PERTAINS TO

~~51-70~~	~~50 BMG-M2 HB (FLEX)~~
~~51-71~~	~~50 BMG-M2 HB (FXD)~~
~~51-74~~	~~30 BMG-M2 HB (FXD)~~
~~51-75~~	~~30 BMG-M2 HB (FLEX)~~
~~51-77~~	30 BMG-M19 A2
~~51-83~~	30 BMG-M19 A4 (FXD)
~~51-84~~	30 BMG-M19 A4 (FLEX)
~~51-88~~	~~50 BMG-M2 HB (FXD N)~~
C5564306	
~~C64906~~	~~SIGHT, REAR, ASM.~~

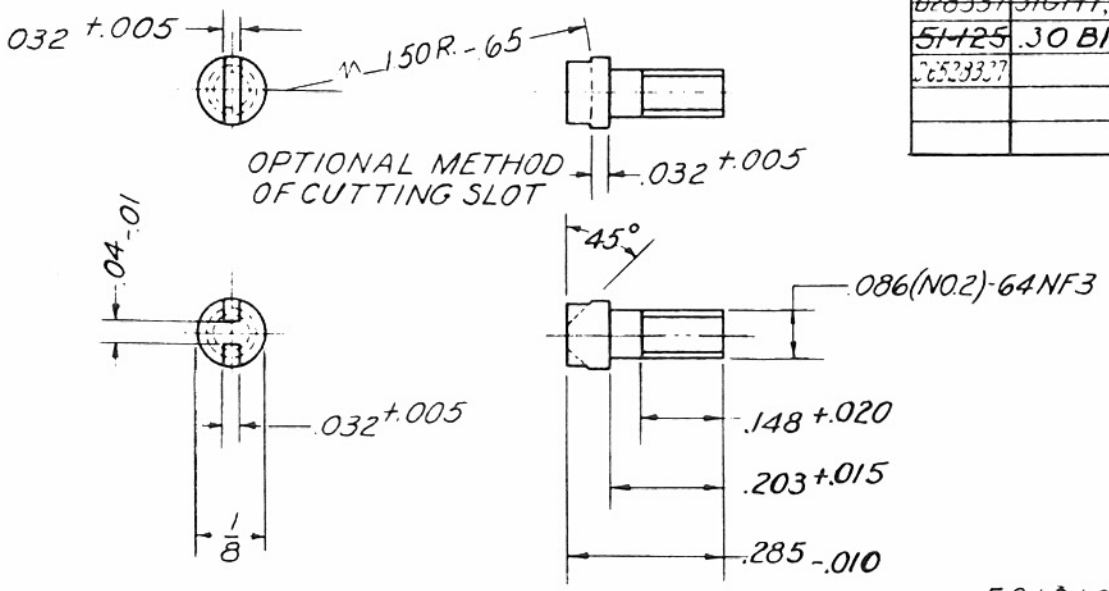

5013167

SCREW, REAR SIGHT WINDAGE SCALE ~~A13167-19~~

STEEL WD. 1112 COLD DRAWN

FINISH f

DRAFTSMAN	CHECKED	ENGR.	ENGR. DRAFTSMAN
GLK	HMF		

SUBMITTED

COL. ORD. DEPT.

DO NOT INSCRIBE PART NO

SPRINGFIELD ARMORY

A 5013167

A13167

APPROVED BY ORDER OF THE CHIEF OF ORDNANCE

COL. ORD. DEPT. U. S. A.

ORDNANCE DEPT. U. S. A.

TOLERANCE ±.01 ALLOWED ON ALL DIMENSIONS UNLESS OTHERWISE SPECIFIED.

SUPERSEDES OLD TRACING A13167 UNDER REVISION DATE OF AUGUST 5, 1942.

SCALE 4/1

15-15 SUPERSEDES A13167

A 5013167

~~A13700~~

A5013700

HEAT TREATMENT & FINAL FINISH	PHYSICAL PROPERTIES						APRIL 30, 1934
	Y.P.		RED.		ROCK		REVISIONS
	T.S.		BR.				16 2-1-44
PROTECTIVE FINISH TYPE II CLASS A OR B.	EL.2						17² 4-30-46
							18⁴ CONVERSION 1-28-49
							19¹ 3-24-49

DO NOT INSCRIBE PART NO.

~~51-102~~	.30 B.A.R.-M1918 A2
06535423	~~SIGHT, REAR, GR. ASM.~~
~~51-74~~	~~.30 B.M.G. M2 H.B. (FXD.)~~
~~51-75~~	~~.30 B.M.G. M2 H.B. (FLEX.)~~

DR'G. PERTAINS TO

~~51-83~~	.30 B.M.G.-M19A4 (FXD.)
~~51-70~~	.50 B.M.G.-M2 H.B. (FLEX)
~~51-71~~	.50 B.M.G.-M2 H.B. (FXD.)
06528337	~~SIGHT, REAR, GR. ASM.~~
~~51-77~~	.30 B.M.G.-M19A2
~~C64003~~	~~LATCH, WITH WINDAGE~~
C5564003	~~SCREW & BASE ASM.~~
~~51-13~~	~~.30 B.A.R. M18~~
~~51-125~~	.30 B.M.G.-M19A6
~~51-84~~	.30 B.M.G.-M19A4 (FLEX.)
~~51-88~~	~~.50 B.M.G. M2 H.B. (FXD. N.)~~
C5564906	~~SIGHT, REAR, ASM.~~

5013700

PIN, REAR SIGHT WINDAGE KNOB ~~A13700-17~~

STEEL W.D 1095

FINISH f

D'FTSMAN	TRACER	L'DG. D'FTSMAN
[signature]	[signature]	[signature]
CHECKER		CHIEF D'FTSMAN
[signature]	[signature]	[signature]

SUBMITTED:-

[signature]

ORD ENG. ORD. DEPT.

TOLERANCE ±.01 ALLOWED ON ALL DIMENSIONS UNLESS OTHERWISE SPECIFIED

SUPERSEDES OLD TRACING A13700 UNDER REVISION DATE OF FEB 1, 1944.

SCALE 2/1

SPRINGFIELD ARMORY

A5013700

~~A13700~~

APPROVED BY ORDER OF THE CHIEF OF ORDNANCE.-

[signature]

LT. COL. ORD. DEPT.

ORDNANCE DEPT., U. S. A.

SUPERSEDES A13700

A 5152429

HEAT TREATMENT & FINAL FINISH	PHYSICAL PROPERTIES					
TYPE II FINISH, CLASS B	Y. P.		RED.		SCL.	
	T. S.		BR.			
	EL. 2		ROCK			

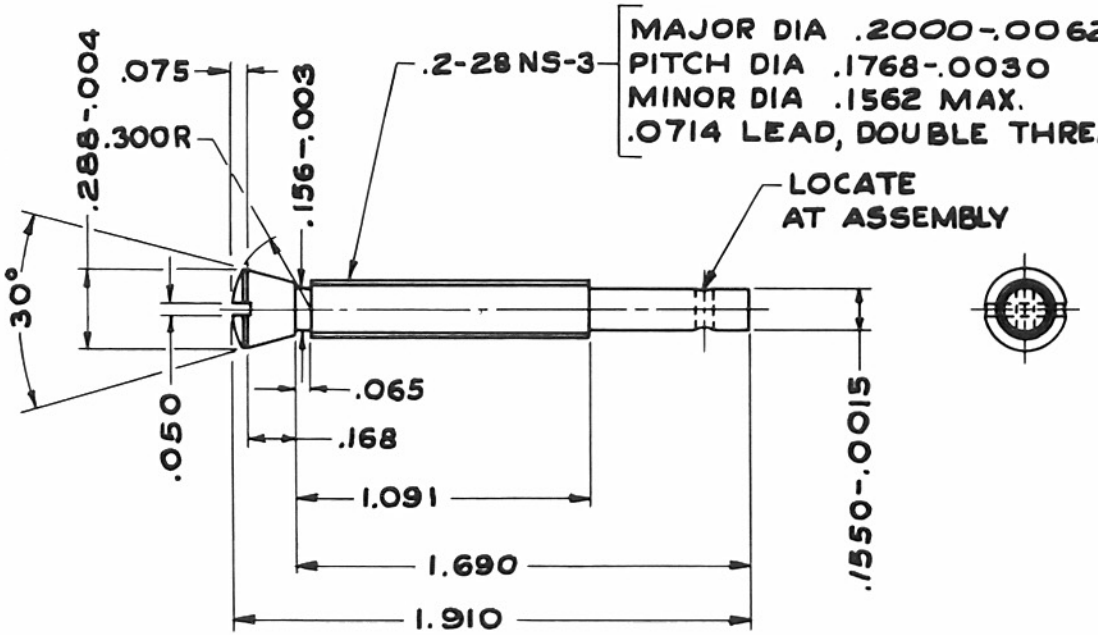

SCREW, WINDAGE, REAR SIGHT (C) 5152429

STEEL FS X1020

FINISH 125

WAS A152429

SCALE 2/1

A	5152429

MARCH 10, 1939

REVISIONS

7	5-10-48			

DRG. PERTAINS TO

C5564906	30 BMG M19A4 (FXD) M19A4 (FLEX) M19A6

DO NOT INSCRIBE PART NO.

TOLERANCE ON DIMENSIONS
NOT OTHERWISE SPECIFIED
DECIMAL ± .005
FRACTIONAL ± —
ANGULAR ± 1°

DRAFTSMAN	TRACER	L'D'G DRAFTSMAN
M.T.	O.K.	
CHECKER L.S.C.	O.O.	CHIEF DRAFTSMAN

SUBMITTED:
A. W. Roe
ORD. DEPT., U. S. A.

APPROVED BY ORDER OF THE CHIEF OF ORDNANCE:
Walter Ackerman
ORD. DEPT., U. S. A.

ORDNANCE DEPT., U. S. A.

A 5152430

HEAT TREATMENT & FINAL FINISH	PHYSICAL PROPERTIES					
TYPE II FINISH, CLASS B	Y. P.		RED.		SCL.	
	T. S.		BR.			
	EL. 2		ROCK			

MARCH 10, 1939

REVISIONS

8	5-10-48		

DRG. PERTAINS TO

C5564906	.30 BMG M19A4 (FXD) M19A4 (FLEX) M19A6

INSCRIBE PART NO. DO NOT

TOLERANCE ON DIMENSIONS NOT OTHERWISE SPECIFIED
DECIMAL : .005
FRACTIONAL : —
ANGULAR : —

DRAFTSMAN	TRACER	L'D'G DRAFTSMAN
H.D.C.	O.K.	
CHECKER L.S.C. / E.W.R.	O.O.	CHIEF DRAFTSMAN

SUBMITTED:
A.W. Roe
ORD. DEPT., U. S. A.

APPROVED BY ORDER OF THE CHIEF OF ORDNANCE:
Walter Ackerman
ORD. DEPT., U. S. A.

ORDNANCE DEPT., U. S. A.

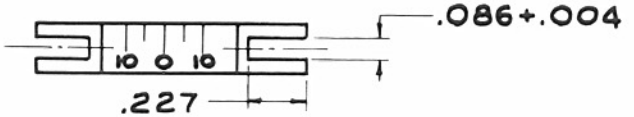

VIEW SHOWING ALTERNATIVE METHOD OF MANUFACTURE

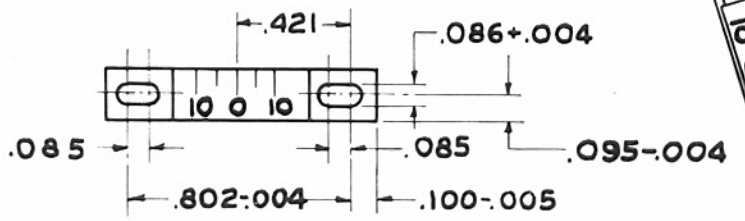

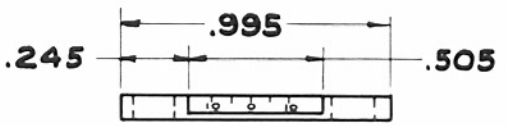

NOTE:
GRADUATIONS .01 WIDE, .005 DEEP, FIGURES .08 HIGH. FILL GRADUATIONS AND FIGURES WITH WHITE ENAMEL.

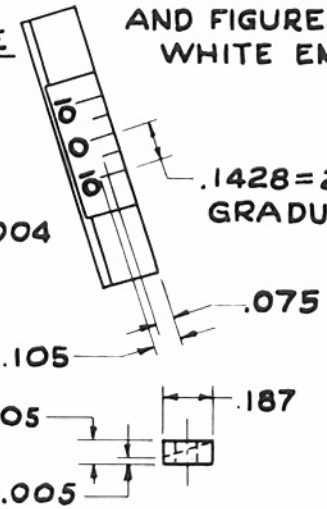

SCALE, WINDAGE, REAR SIGHT

STEEL FS X1020

FINISH 125

(C) 5152430

WAS A152430

SCALE 2/1

A 5152430

A5159870

HEAT TREATMENT & FINAL FINISH	PHYSICAL PROPERTIES					
HEAT TREAT TYPE II FINISH, CLASS B	Y. P.		RED.		SCL.	
	T. S.		BR.			
	EL. 2		ROCK		C.C.	.004 TO .006 DEEP

MARCH 10, 1939

REVISIONS

10	5-10-48			

DRG. PERTAINS TO

C5564906	.30 BMG M19A4 (FXD) M19A4 (FLEX) M19A6

INSCRIBE PART NO. DO NOT

TOLERANCE ON DIMENSIONS NOT OTHERWISE SPECIFIED
DECIMAL ± .01
FRACTIONAL ± 1/64
ANGULAR ± 5°

DRAFTSMAN	TRACER	L'D'G DRAFTSMAN
M.T.	O.K.	
CHECKER LSC GWR	O.O.	CHIEF DRAFTSMAN

SUBMITTED:
A. H. Roe
ORD. DEPT., U. S. A.

APPROVED BY ORDER OF THE CHIEF OF ORDNANCE:
Walter Ackerman
ORD. DEPT., U. S. A.

ORDNANCE DEPT., U. S. A.

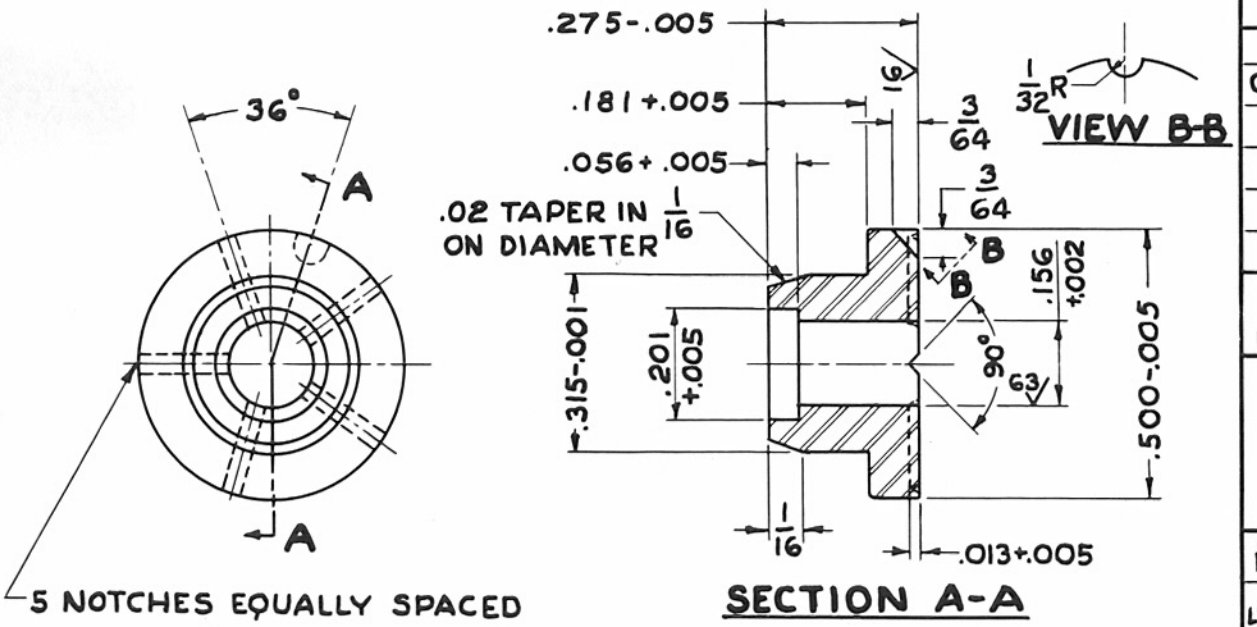

SECTION A-A

BUSHING, REAR SIGHT WINDAGE SCREW (5)159870

STEEL FSX 1020

FINISH 125, OTHER SURFACES AS SPECIFIED

WAS A159870

SCALE 4/1

A 5159870

A5162810

HEAT TREATMENT & FINAL FINISH	PHYSICAL PROPERTIES					
TYPE II FINISH, CLASS B	Y. P.		RED.		SCL.	
	T. S.		BR.			
	EL 2		ROCK			

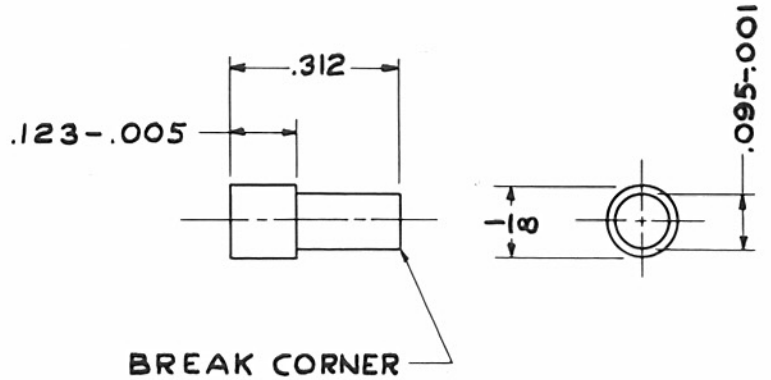

PIN, STOP, REAR SIGHT LEAF (5)162810

STEEL FSX 1315

FINISH 125

WAS A162810

SCALE 4/1

A 5162810

MARCH 10, 1939

REVISIONS

6	5-10-48			

DRG. PERTAINS TO

C5564906	.30 BMG M19A4 (FXD) M19A4 (FLEX) M19A6

DO NOT INSCRIBE PART NO.

TOLERANCE ON DIMENSIONS
NOT OTHERWISE SPECIFIED
DECIMAL ± .005
FRACTIONAL ± 1/64
ANGULAR ± —

DRAFTSMAN	TRACER	L'D'G DRAFTSMAN
APB	O.K.	
CHECKER LSC EWR		CHIEF DRAFTSMAN

SUBMITTED:
A.M. Roe
ORD. DEPT., U. S. A.

APPROVED BY ORDER OF THE CHIEF OF ORDNANCE:
Walter Ackerman
ORD. DEPT., U. S. A.

ORDNANCE DEPT., U. S. A.

HEAT TREATMENT AND FINAL FINISH
PROTECTIVE FINISH TYPE II GLASS A.O.B.

DO NOT INSCRIBE PART NO.

~~51-75~~	~~.30 BMG-M2 H.B (FLEX)~~

PHYSICAL PROPERTIES	
Y.P.	
T.S.	
EL.2	
RED.	
BR.	
ROCK.	

APRIL 30, 1934

REVISIONS

21	4-15-44	
22'	5-6-44	
23[2]	4-30-46	
24[3]	CORRECTED 1-25-49	
25'	3-30-49	

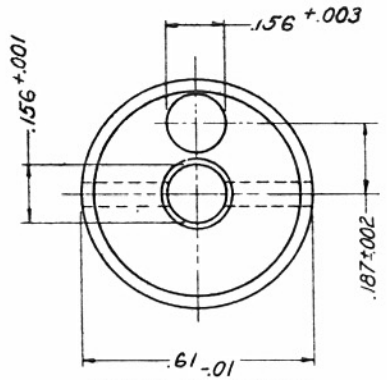

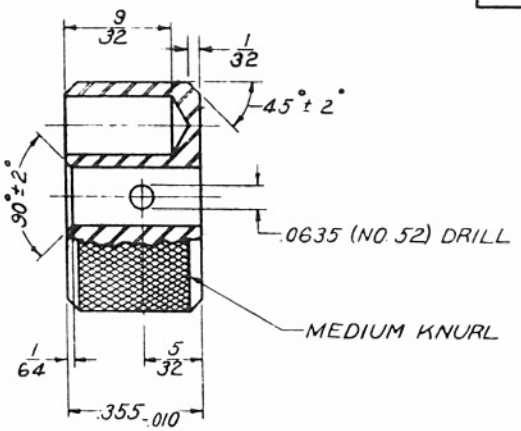

DRG. PERTAINS TO

~~51-13~~	~~.30 B.A.R. M1 C~~
51-102	30 B.A.R. M1 C A2
~~D6535425~~	~~SIGHT, REAR, GR. ASM~~
~~51-70~~	~~.50 B.M.G. M2 H.B (FLEX)~~
~~51-71~~	~~.50 B.M.G. M2 H.B. (FXD)~~
~~51-80~~	~~.50 B.M.G. M2 H.B (FXD)~~
D6528337	SIGHT, REAR, GR. ASM
51-77	.30 B.M.G. - M19 A2
C5507416	SIGHT, REAR, V-PLATE ~~FINDING DIAGRAM~~
~~51-83~~	~~.30 B.M.G. M19 A4 (FXD)~~
~~51-84~~	~~.30 B.M.G. M19 A4 (FLEX)~~
~~51-125~~	~~.30 B.M.G. M19 A6~~
C5564906	~~SIGHT, REAR, ASM~~
~~51-74~~	~~.30 B.M.G. M2 H.B (FXD)~~

D'FTSMAN	TRACER	L'DG. D'FTSMAN
H.M.F.		
CHECKER		CHIEF, D'FTSMAN

SUBMITTED:

HD. ORD. ENG. ORD. DEPT.

APPROVED BY ORDER OF THE CHIEF OF ORDNANCE:

LT. COL., ORD. DEPT.

ORDNANCE DEPT., U.S.A.

6008809

KNOB, REAR SIGHT WINDAGE SCREW ~~B8809-23~~

STEEL WD. 1112 COLD DRAWN

FINISH f

TOLERANCE ±.01 ALLOWED ON ALL DIMENSIONS UNLESS OTHERWISE SPECIFIED.

SUPERSEDES OLD TRACING B8809 UNDER REVISION DATE OF APRIL 15, 1944.

SCALE 4/1

SPRINGFIELD ARMORY

B 6008809

~~B 8809~~

B6008809

SUPERSEDES B8809

HEAT TREATMENT AND FINAL FINISH

PHYSICAL PROPERTIES	
Y. P.	
T. S.	
EL. 2	
RED	
BR.	
ROCK.	
SCL.	

MARCH 10, 1939

REVISIONS

7	5-10-45			
8	10-21-48			
9	11-15-49			

DRG. PERTAINS TO

51-83-1	.30 BMG M1944 (FXD)
51-84-1	.30 BMG M1944 (FLEX)
51-125-1	.30 BMG M1946

C5564906

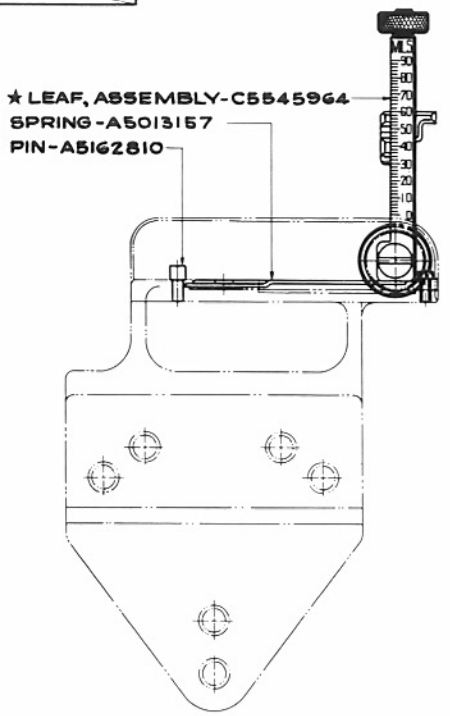

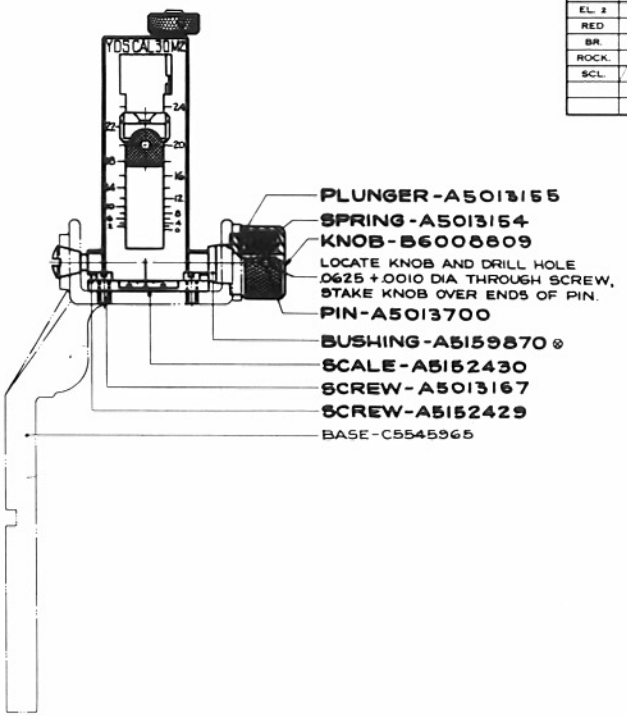

⊗ NOTE:
STAKE BUSHING A5159870 AT ASSEMBLY

★ FINDING DIAGRAM

SIGHT, REAR, GROUP, ASSEMBLY (5564906)

TOLERANCE ON DIMENSIONS NOT OTHERWISE SPECIFIED
DECIMAL ± ___
FRACTIONAL ± ___
ANGULAR ° ___

DRAFTSMAN	TRACER	L & S DRAFTSMAN
M.E.B.	Z.C.	
CHECKED		CHIEF DRAFTSMAN

SUBMITTED:
A.H.Roe

APPROVED BY ORDER OF THE CHIEF OF ORDNANCE
Walter Ackerman
COL. ORD. DEPT. U.S.A.

ORDNANCE DEPT., U. S. A.
MADE AT ROCK ISLAND ARSENAL

WAS C64906

DO NOT INSCRIBE PART NO.

C 5564906

0 1 2 IN.